3PHASE MOTOR SPEED CONTROL DRIVER FOR ELECTRICAL VEHICLE

William Camilo, Ariel Matías, Emil Rodriguez, Julio Gutierrez, Edgar Cruz, Miguel Vásquez, Dacely Beltran

Cidtec Unapec, Dominican Republic

Abstract — *The extraordinary increase of the price of the petroleum barrel, that in the last dates has gotten to surpass the 67 dollars, is due to the shortage of this resource in the world-wide market. The problem at this moment is not by the side of the capacity of the supply, but by the side of the strong demand of the world. The instant case of the weakness of world-wide the oil market is the continuous increase of the demand of the expansion economies, that are these dates has already reached the 84,4 million barrels of petroleum to the day. Some countries already are remaining are petroleum and the rows of delay to acquire the provisions of this resource, now are organized by the price. Nowadays the nations that they have for a barrel over the 100 dollars will be able to continue with their programs of economic growth, those that no, simply will have to hope to that the price lowers to be able to buy it. In Central America already the enormous increase in the price of the crude one is suffered and one of the sectors more harmed is the one of the transport, due to its direct dependency. Reason why at present bottoms have dedicated many for investigation of another methods to depend less possible on derivatives of petroleum, as it is the case of the hybrid vehicles whose mechanism is based on a motor of combustion along with an three-phase motor, all this trying to consume the less possible gasoline, since the three-phase motor can work with stored electrical energy of one or the other form. Reason why for this case the creation is needed a reliable control system for the handling of the three-phase motor.*

Key Words — 3phase inverter, electronic driver, electrical motors, three phase motor calculation, pwm voltage control, frequency and voltage constant.

I. INTRODUCTION

THE PARAMETERS THAT DEFINE THE PROBLEM AND SOLUTIONS Three-phase engine control Possible solutions 1-Creation of a mechanical motor 2-Creation of an electronic control Space that the circuit occupies within the car Possible solutions 1-Create a specific space at the time of the design of the frame of the car. 2-Realise the design of possible smallest mechanical or electronic the control. 3-that the design of the mechanical or electronic control adjusts to the spaces nonused of the car. That the investment for the design is economic Possible solutions 1-Use devices or machineries of low cost. 2-Create a design of control with few devices or machineries.

CHOSEN SOLUTION

It has been chosen like solution to the problem, the creation of his electronic relatively small size, control system and low cost of construction. Reason why for this case the creation is needed a reliable control system for the handling of the three-phase motor.

So due to the necessity to secure to new power plants and new means of locomotion for an alternative transport, our university "UNAPEC", has seted out to direct viable options in the design and development of electrical vehicles for the human transport, of load and the diversion.

DEVELOPING THE 3 PHASE MOTOR SPEED CONTROL DRIVER FOR ELECTRICAL VEHICLE (Design, Motor calculation, and Electronics circuit Innovations for Manufacture)

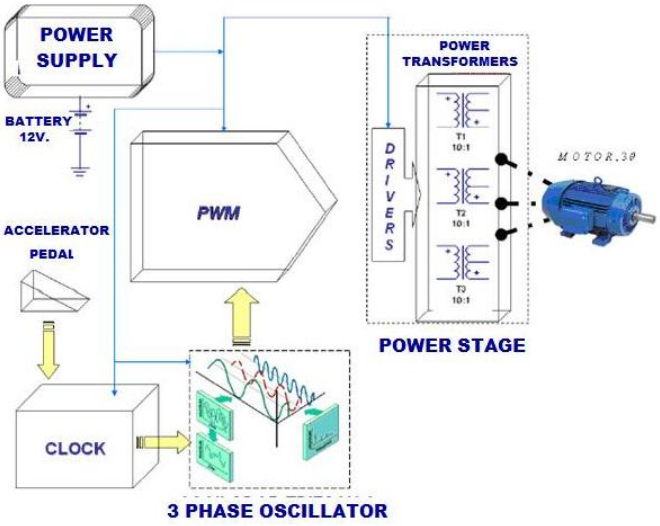

Fig. 1 a

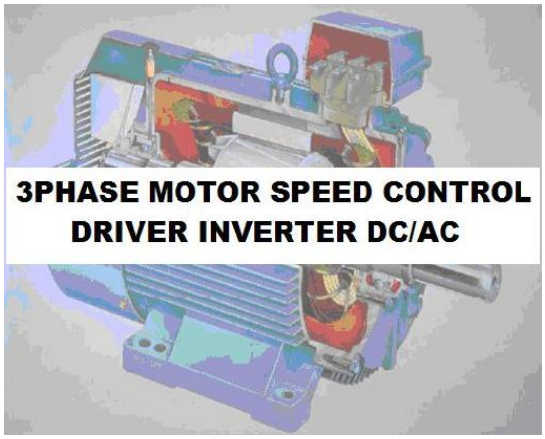

Fig. 1b

Fig. 2

The electrical motor like transformer Multiphase motor It is that one rotatory machine that turns the electrical energy into mechanical energy. This completes is given to wing loads connected to this machine (motor) through axis.

Mathematical model of electrical motor three-phase transforming sight as We see a phase of the motor (understood like a balanced system)

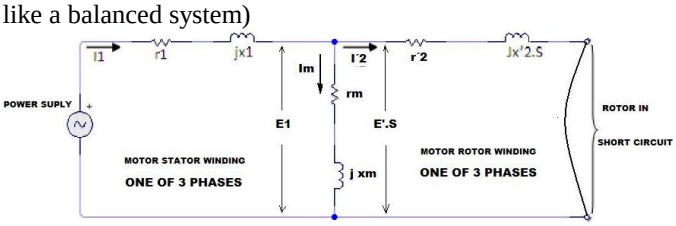

Fig. 4

Soon applying LVK in the Previous fig we fear; Thus:

1) $S = \frac{n_{sinc} - n_{mec}}{n_{sin}} * 100$

Because the movement between primary and the secondary one (stator, and rotor); the relation settles down of sliding (slip) between the revolving magnetic fields of the stator and the rotor respectively. Being: S=slip nsinc= synchronous Speed nmec= mechanical Speed of the motor Also (nsinc-nmec) = rotatory speed between the field the stator and field of the rotor Note: all induced voltage E1 and E2 as the reactors are affected by the sliding (s).

1) $V_1 - I_1 r_1 - I_1 J X_1 + S E_1 = 0$

2) $E'_2 . S - I_2 r'_2 - I_2 J X_2 * S = 0$, If we divided equation (2) between (s) we will have: 3) $\frac{E'_2 - I'_2 r'_2 - I_2 * X'_2}{S} = 0$ This equation could be expressed like: 4) $E'_2 - I'_2 r'_2 - I'_2 r'_2 \frac{(S-1)}{S} - I'_2 K'_2 = 0$ That he is equivalent to the equation (3) Thus the mathematical model of the motor will appear like:

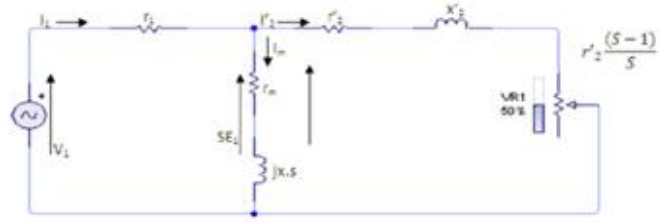

Fig. 3

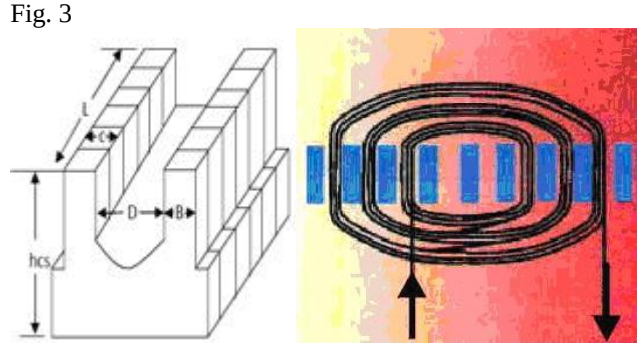

Fig. 5b

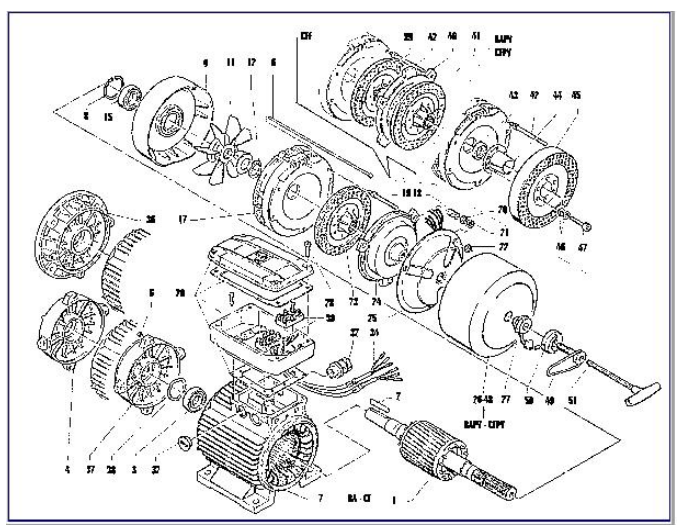

Fig. 6 Details of the dimensions of the teeth and grooves of the motor stator for winding calculations.

THE MOTOR CALCULATIONS

Table for magnetic density (Be)

pair of poles	P=1	P=2	P=3	P=4
$B_e \frac{wb}{m^2}$	0.75	0.82	0.82	0.82
$B_{cs} \frac{wb}{m^2}$	1.75	1.65	1.55	1.45
KV%	2	2.5	3.01	3.5

With: $B_{cs} = \frac{B_e * D_i}{2hcs * P}$; $G = q = \frac{n_e}{m * RP}$

And Kp, as step factor: $Kp = cos\left(g * \frac{d}{2}\right)$; $d = p * \left(\frac{360}{n_e}\right)$

And K2, as distribution factor: $K_2 = K_d = \frac{sen\, q\left(\propto/_2\right)}{q\, sen\left(\propto/_2\right)}$; $\propto = \left(\frac{180}{m * q}\right)$

And Kb, as winding factor: $Kb = Kp * Kd$; and bph, coil windings per phase:

So the turns number (Nb) for each winding phase are:

$$Nb = \frac{vph * \left(1 - \frac{KV\%}{100} * P\right)}{4.44 * f * Be * Di * L * 0.95 * Kb * bph};$$

Being: vph, phase voltage, kv%, overvoltage as poles, f, frequency, Hcs= Height of the tooth, ne= I number of grooves, m= phases, P= pair of pole Inner, Di=Diameter, L= Length of the tooth, q= coils/group, and constants.

Winding connetions

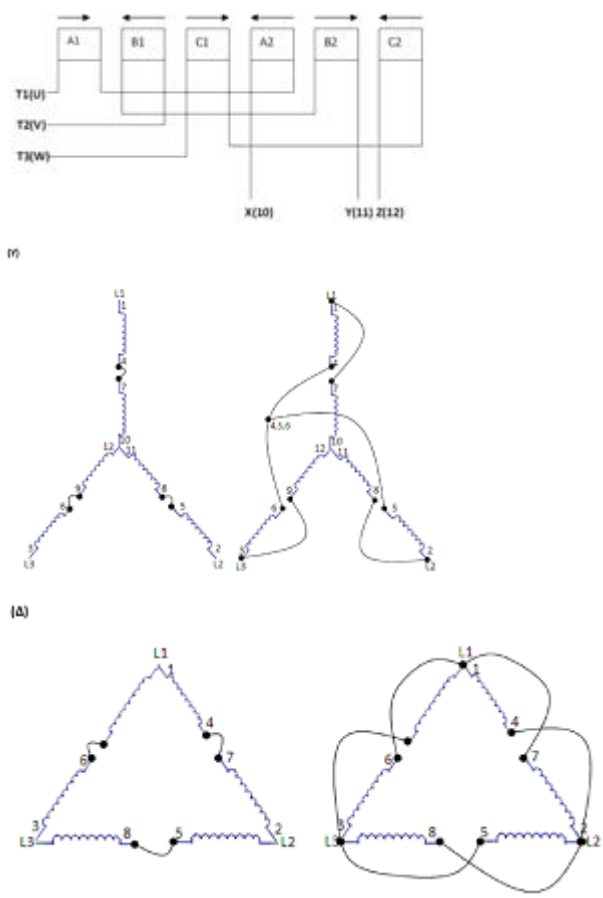

Fig. 7

3 PHASE WAVE FORMS FOR THE POWER DRIVER INVERTER DESIGN

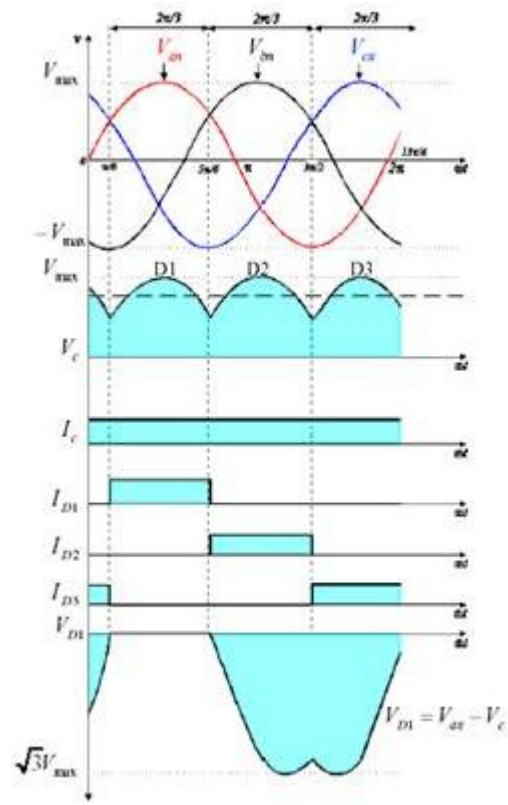

Fig. 8

PARAMETERS THAT DEFINE THE PROBLEM AND SOLUTIONS

Three-phase engine control Possible solutions 1-Creation of a mechanical motor 2-Creation of an electronic control Space that the circuit occupies within the car Possible solutions 1-Create a specific space at the time of the design of the frame of the car. 2-Realise the design of possible smallest mechanical or electronic the control. 3-that the design of the mechanical or electronic control adjusts to the spaces nonused of the car. That the investment for the design is economic Possible solutions 1-Use devices or machineries of low cost. 2-Create a design of control with few devices or machineries. CHOSEN SOLUTION It has been chosen like solution to the problem, the creation of his electronic relatively small size, control system and low cost of construction.

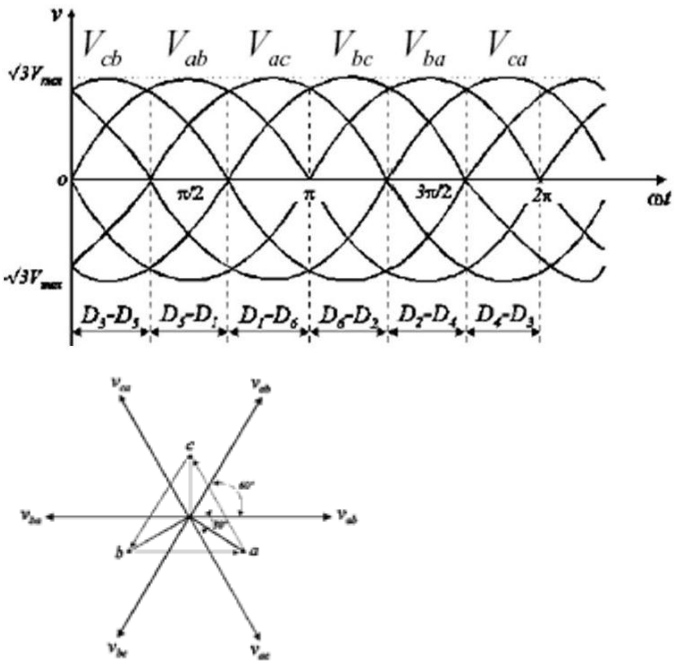

Fig. 9

FIRST 3PHASE NON REGULATED ELECTRONIC GENERATION SYSTEM

Fig. 10

Option for pwm generation per phase

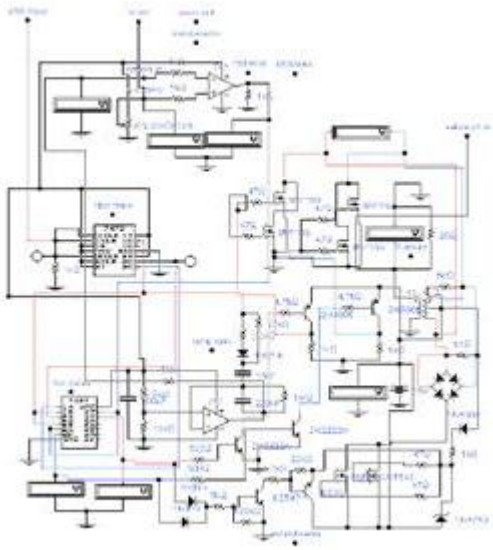

Fig. 11

Another non regulated 3 phase inverter model STATE OF ART

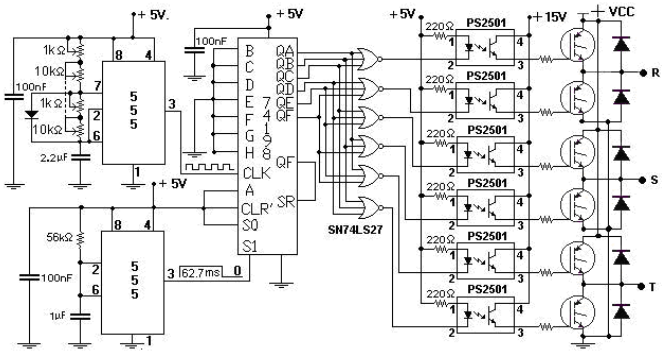

Fig. 12

POWER SUPPLY IF NO ARE USING BATTERIES STATE OF ART

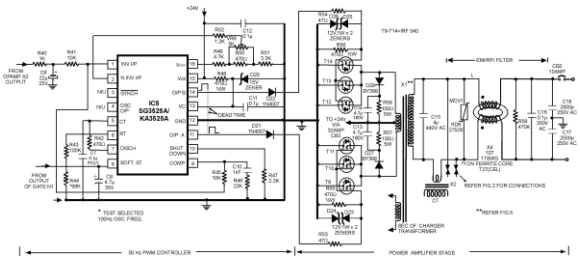

Fig. 13

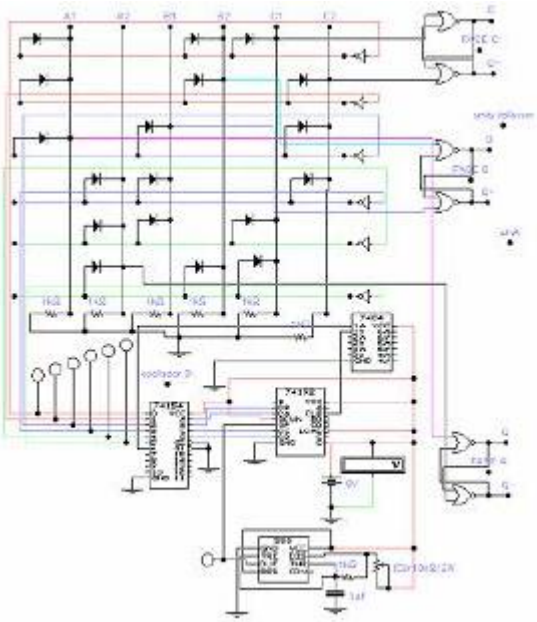

OUR DIAGRAMS IN BLOCKS OF THE CONTROL SYSTEM

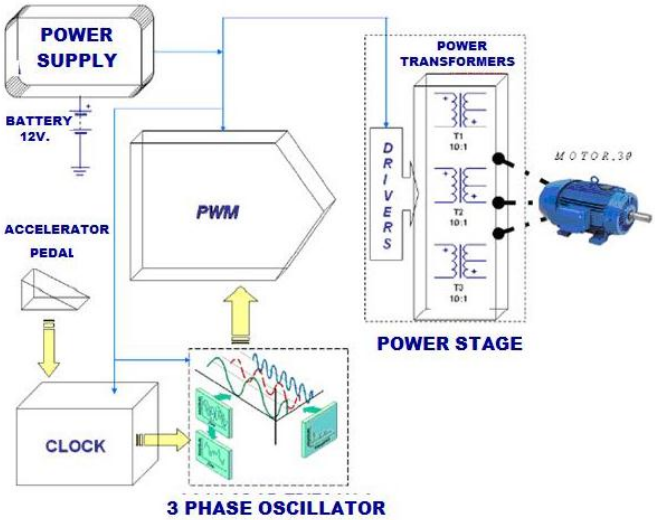

Fig. 14

Fig. 15

POSSIBLE DESIGNS OF THE BLOCKS FOR A FULL REGULATED SYSTEM •

BLOCK POWER SUPPLY

Since a great amount is needed current, the battery of the vehicle will be used like primary source, and in some cases sources of voltages will be used to assure the stability the tension in sensible stages.

• BLOCK CLOCK Options: 1-Circuit Astable with integrated 555 2-Circuit Astable with transistors •

THREE-PHASE OSCILLATING BLOCK Options: Integrated 1-Circuit 4017 Mechanical 2-Motor 3-Flip-Flops •
BLOCK PWM Options: 1-Circuit with OPAM 2-Circuit with integrated PWM 3-with adjustments of SCR and UJT •
BLOCK POWER STAGE Options: 1-Drivers with Mosfets and transforming 2- Drivers with BJT and transforming 3-with transistors in Bridge (Bridge) CHOSEN DESIGNS The emphasized options were the chosen ones for the development of the project.

GENERAL DESCRIPTION OF THE OPERATION The POWER SUPPLY
provided by the battery of the vehicle, is in charge to feed all the stages on the electronic circuit.
The CLOCK and OSCILLATOR TROFASICO,
work jointly to generate a signal out of phase to 120 degrees, signals that go directly to the PWM to modulate their width of pulse. Emphasizing that the frequency and the width of the pulse will be varied proportionally as the conductor exerts pressure to the accelerator. The exits of the PWM are connected to the POWER STAGE where the signal is amplified providing a proportional voltage to integration in the time of the signal of the PWM. Finally an asynchronous three-phase motor is connected.

ELECTRONIC SCHEME

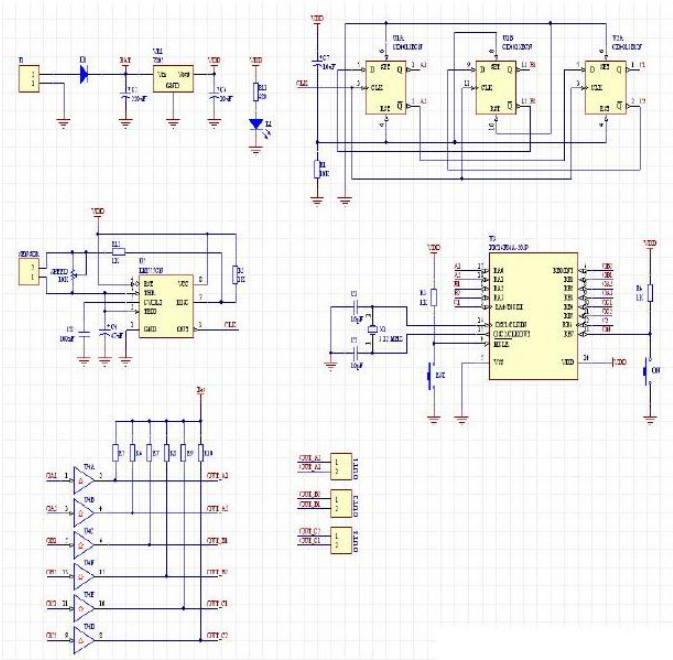

Fig. 16

SCHEMES AND EXPLANATIONS

SCHEME POWER SUPPLY

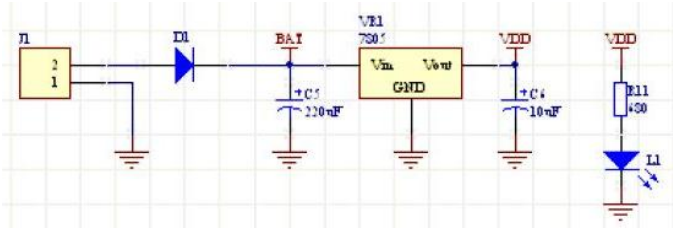

Fig. 17

As it were explained previously, the primary power supply is the battery of the vehicle reason why the scheme only shows to the connection of a regulator 7808 with condensers in the entrance and the exit to leak to filter so much the entrance of the regulator like its exit. This circuit serves to feed the blocks: Clock, three-phase Oscillator, PWM and drivers of the power entrance.

SCHEME CLOCK

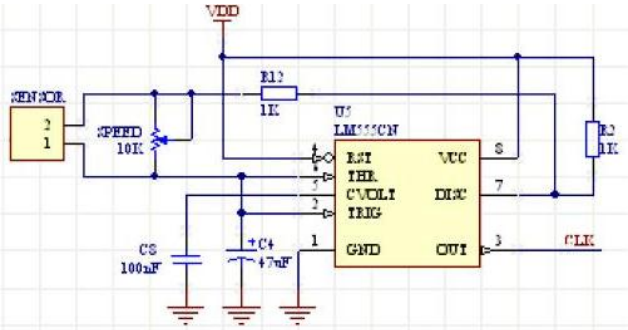

Fig. 18

In this way an oscillating square signal to frequencies of 1.2Hz to 60Hz is generated, the same signal will have like value high VDD (approximately) and like value under 0V. If it is desired to fit the frequency it must fit the D1 potentiometer.

THREE-PHASE OSCILLATING SCHEME

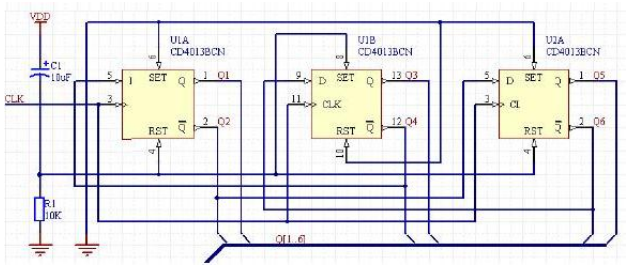

Fig. 19

The Flip-Flops is connected in Jhonson accountant with his clocks united and these receive the signal of count of circuit 555 of the Clock block, this union allows to generate been out of phase signals to 120 gados.

SCHEME POWER

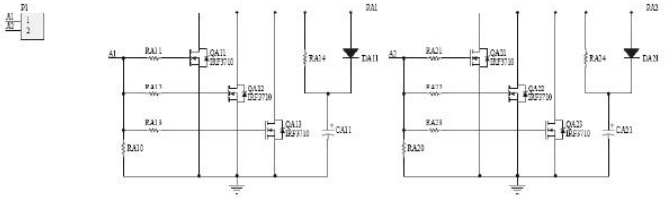

Fig. 20

STAGE It is a stage of simple power with transistors MOSFETS used in any investor, with snubber to suppress inverse tips and avoiding that the MOFETS undergo some type of damage.

SCHEME PWM

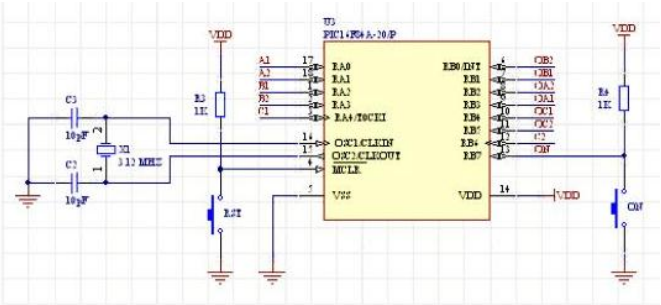

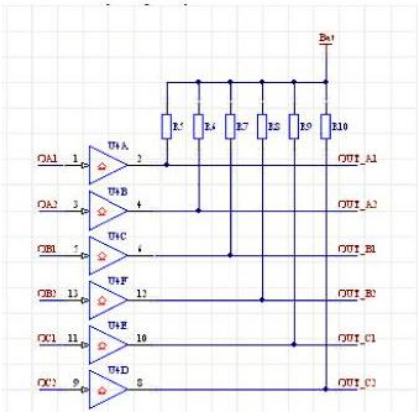

Fig. 21

In order to carry out the control of widening of the pulse a circuit based on microcontroller was taken like control (PIC16F84A) who owns the function to control the time of conduction of each exit according to is the value of the entrance frequency. Later like driver and connected to the exits of microcontroller. This is an pre-amplification stage that takes the exit to the power muscle that controls the power transistors.

PRINTED CIRCUIT BOARD

Fig. 22

MODEL 3D

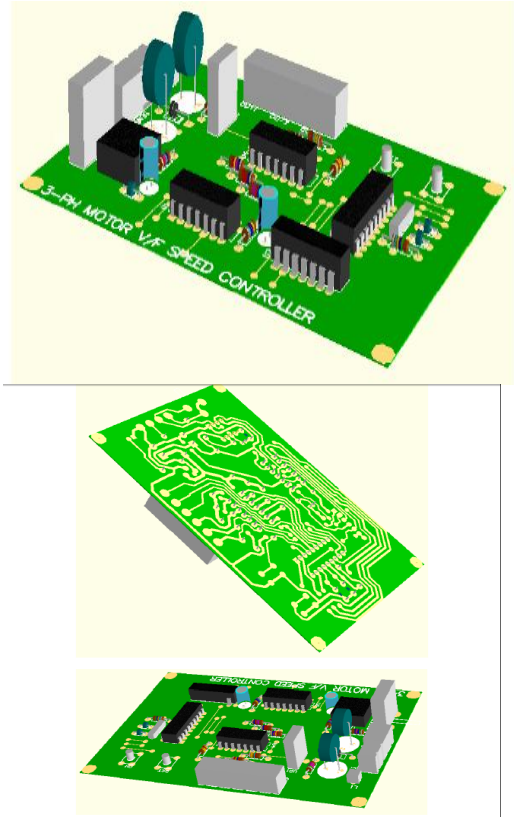

Fig. 23

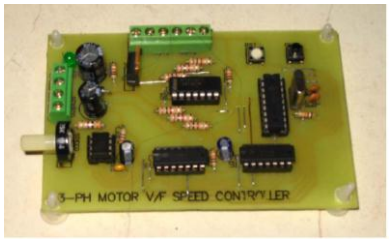

Fig. 24

CONCLUSION

The instant case of the weakness of world-wide the oil market is the continuous increase of the demand of the expansion economies, that are these dates has already reached the 84,4 million barrels of petroleum to the day. Some countries already are remaining are petroleum and the rows of delay to acquire the provisions of this resource, now are organized by the price. Nowadays the nations that they have for a barrel over the 100 dollars will be able to continue with their programs of economic growth, those that no, simply will have to hope to that the price lowers to be able to buy it. In Central America already the enormous increase in the price of the crude one is suffered and one of the sectors more harmed is the one of the transport, due to its direct dependency. Reason why at present bottoms have dedicated many for investigation of another methods to depend less possible on derivatives of petroleum, as it is the case of the hybrid vehicles whose mechanism is based on a motor of combustion along with an three-phase motor, all this trying to consume the less possible gasoline, since the three-phase motor can work with stored electrical energy of one or the other form. Reason why for this case the creation is needed a reliable control system for the handling of the three-phase motor.

BIBLIOGRAPHY

[1] Alves, E., Cabaleiro, P. and Donoso, P. (2002). For Small-signal stability parallel-connected converters in stand-alone AC supply systems. IEEE Transactions on Industry Applications, 38, 533 - 542.

[2] Control Key Ltda. (2005). In: http://www.micrograde s.com

[3] Gualda, J., Martinez, S. and Martinez, P. (2003) Electronic Industrialist: Techniques of power. 2ª Edition, Alfaomega - Marcombo, Mexico D.F.

[4] Idowou, P. (2004), In search of to perfect to power eng.

http://web.ing.puc.cl/~power/paperspdf/dixon/tesis/Rios.pdf

http://www.javeriana.edu.co/biblos/tesis/ingenieria/tesis06.pdf

http://taee.euitt.upm.es/Congresosv2/2006/papers/2006S1G03.pdf

http://www.utp.edu.co/php/revistas/ScientiaEtTechnica/docsFTP/9514537-42.pdf

http://jupiter.utm.mx/~tesis_dig/10990.pdf

http://www.sublimesolutions.com/portafolio/portafolio_masinfo.php?id=112&secc=portafolio

ANNEXES

Joint the phases in qbsic

```
 LIST    P=PIC16F84


;-----------------------------------------------------------
;                Declaración de registros
;-----------------------------------------------------------
w                 equ  00h
status            equ  03h


i                 equ  0ch
p                 equ  0dh
reg1              equ  0eh
k1                equ  0fh
k2                equ  10h
k3                equ  11h
k4                equ  12h
k5                equ  13h
k6                equ  14h
k7                equ  15h
k8                equ  16h
k9                equ  17h
k10               equ  18h
k11               equ  19h
k12               equ  1ah
k13               equ  1bh
k14               equ  1ch


;-----------------------------------------------------------
;                Declaration of Bits
;-----------------------------------------------------------
c            equ  0   ;carry / borrow bit
rp0          equ  5   ;registrer banck select bit
z            equ  2   ;bit cero
b1           equ  1   ;
b2           equ  2   ;
b3           equ  3   ;
b4           equ  4   ;
b5           equ  5   ;
b6           equ  6   ;


;-----------------------------------------------------------
;                    Start
;-----------------------------------------------------------

reset   org 0
   goto paso2


;-----------------------------------------------------------
;                  Main program
;-----------------------------------------------------------
paso2


;revision of phase 1
paso2

   movf p,0
   sublw d'24'
   movwf k1
   movf p,0
   addlw d'24'
   movwf k2
   movf p,0
   sublw d'72'
   movwf k3
   movf p,0
   addlw d'72'
   movwf k4

   ;si el reg i < k1
   movf k1,w
   subwf i,w
   btfss status,c
   goto j1
   ;si el reg i >= k2
   movf k2,w
   subwf i,w
   btfsc status,c
   goto j1
   bsf reg1,b1
   bcf reg1,b2
   goto paso6
j1
   ;si el reg i < k3
   movf k3,w
   subwf i,w
   btfss status,c
   goto j2
   ;si el reg i >= k4
   movf k4,w
   subwf i,w
   btfsc status,c
   goto j2
   bsf reg1,b2
   bcf reg1,b1
   goto j3
j2
   bcf reg1,b1
   bcf reg1,b2
j3

;revision of phase 2
```

```
   movf p,0
   sublw d'56'
   movwf k5
   movf p,0
   addlw d'56'
   movwf k6
   movf p,0
   sublw d'104'
   movwf k9
   movf p,0
   addlw d'8'
   movwf k8

   ; if reg i < k5
   movf k5,w
   subwf i,w
   btfss status,c
   goto j4
   ;si el reg i >= k6
   movf k6,w
   subwf i,w
   btfsc status,c
   goto j4
   bsf reg1,b3
   bcf reg1,b4
   goto j8
j4
   ;if reg p < d'19'
   movlw d'8'
   subwf p,w
   btfss status,c
   goto j6
   ;si el reg i < k8
   movf k8,w
   subwf i,w
   btfss status,c
   goto j7
   ;if reg i >= k9
   movf k9,w
   subwf i,w
   btfsc status,c
   goto j7
j5
   bcf reg1,b3
   bcf reg1,b4
   goto j8
j6
   movf p,0
   sublw d'8'
   movwf k7
   ;si el reg i <= k7
   movf i,w
   subwf k7,w
   btfsc status,c
   goto j5
   ;if reg i > k8
   movf i,w
   subwf k8,w
   btfss status,c
   goto j5
j7
   bsf reg1,b4
   bcf reg1,b3
j8

;revision of third phase

   movf p,0
   sublw d'40'
   movwf k10
   movf p,0
   addlw d'40'
   movwf k11
   movf p,0
   sublw d'88'
   movwf k12



   ;if reg i < k10
   movf k10,w
   subwf i,w
   btfss status,c
   goto j9
   ;si el reg i >= k11
   movf k11,w
   subwf i,w
   btfsc status,c
   goto j9
   bsf reg1,b6
   bcf reg1,b5
   goto j13
j9
   ;if reg p < d'19'
   movlw d'8'
   subwf p,w
   btfss status,c
   goto j11
   movlw d'8'
   subwf p,0
   movwf k14
   ;if reg i < k14
   movf k14,w
   subwf i,w
   btfss status,c
   goto j12
   ;if reg. i >= k12
   movf k12,w
   subwf i,w
   btfsc status,c
   goto j12
j10
   bcf reg1,b5
   bcf reg1,b6
   goto j13
j11
```

```
   ;if reg i <= k12
   movf i,w
   subwf k12,w
   btfsc status,c
   goto j10
   movf p,0
   addlw d'88'
   movwf k13
   ;if reg i > k13
   movf i,w
   subwf k13,w
   btfss status,c
   goto j10
j12
   bsf reg1,b5
   bcf reg1,b6
j13



End.
```